Buyer : Hackett
Season: SS-25
Fit : Brompton tailored Untucked
Wash : Softner Wash-Strong Press

LAGUNA

Technical Sheet : GPT/PP

Style: HM3010702-GMD
COT LIN SS RO

Con No:HKT/14887

Special Instructions- SPI 16. 3mm shanking &wrapping @ all buttons. Button cross stitch 8X8.

Modified On:26 Dec 2025
Modified By: Muttu

NEW BROMPTON COLLAR

collar point Button holes should not be Break collar Top stitch

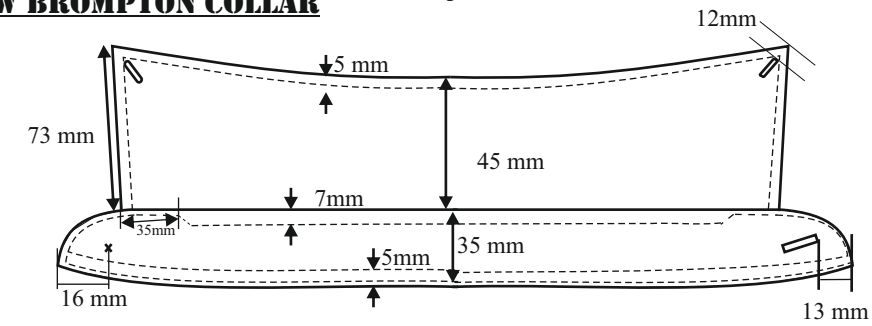

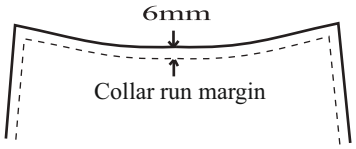

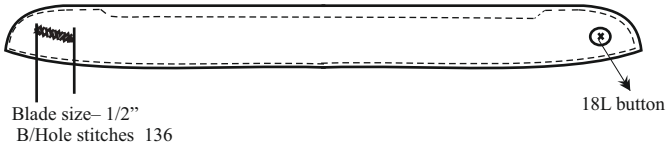

80 mm NK band patch

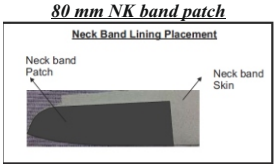

Btn Dwn Placement(B)

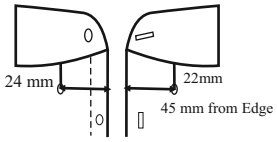

Grommet to be used on B/D Button---- 14L

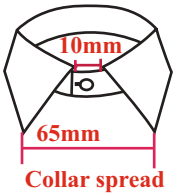

ASSEMBLY

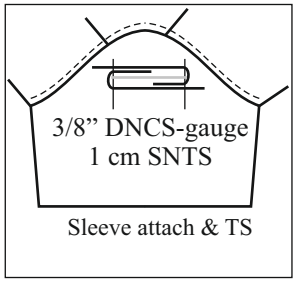

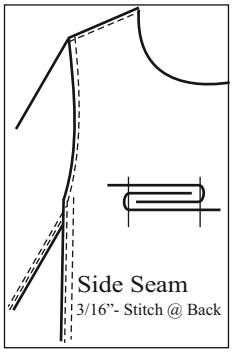

SHORT SLEEVE

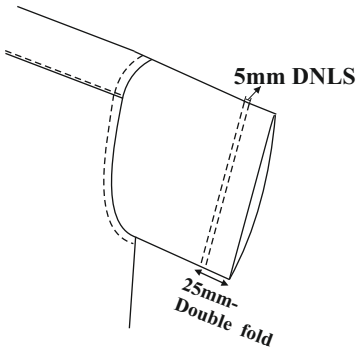

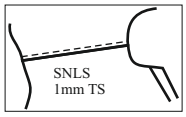

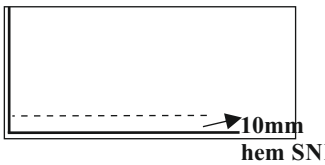

hem SNLS (Double fold)

Slit

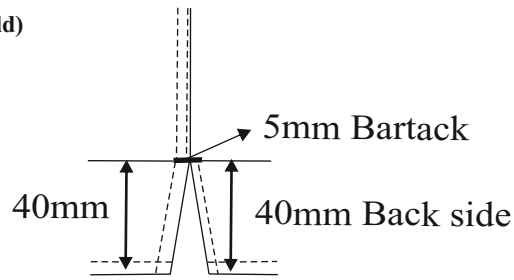

Interlining
Front plkt : Ve35
Collar :3600
Collar patch: N/A
Neck band :3630R
Nk band patch : 3630R
Cuff :N/A

Button(****)
Front : 6, 18L
N Band : 1, 18L
Slv Plkt : N/A
Cuff : N/A
Spare :1-18L, 1-14L@ Pouch
Btn Down : 1+1,14L

*Button shanking S/B 3mm

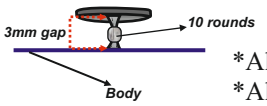

*All Buttons S/B wrapping.
*All Buttons to be readable(Hackett on top side).

Buyer : Hackett
Season: SS-25
Fit : Brompton tailored Untucked
Wash :Softner Wash-Strong Press

LAGUNA

Technical Sheet : GPT/PP

Style: HM3010702-GMD
COT LIN SS RO

Con No:HKT/14887

Special Instructions- SPI 16. 3mm shanking &wrapping @ all buttons. Button cross stitch 8X8.

Modified On:26 Dec 2025
Modified By: Muttu

FRONT

Left placket would be DNLS

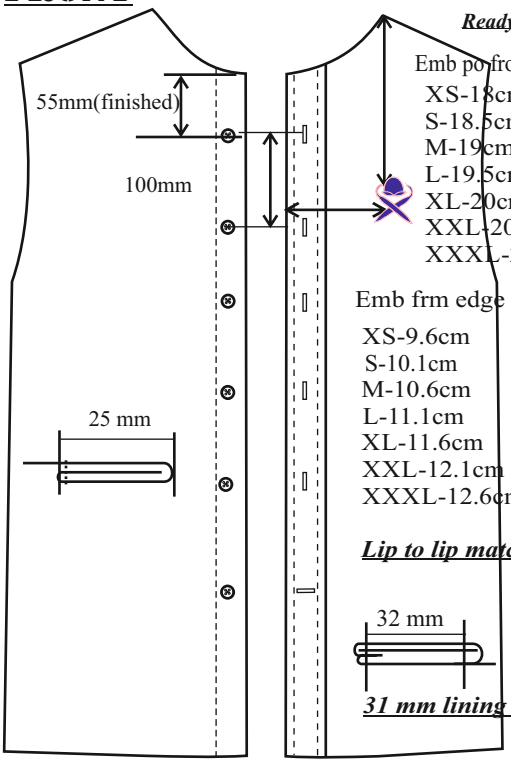

Ready measurement- After Shrinkage

Emb po from sh point to top of Branding
XS-18cm
S-18.5cm
M-19cm
L-19.5cm
XL-20cm
XXL-20.5cm
XXXL-21cm

Emb frm edge
XS-9.6cm
S-10.1cm
M-10.6cm
L-11.1cm
XL-11.6cm
XXL-12.1cm
XXXL-12.6cm

Lip to lip match @ Left front

32 mm

31 mm lining cut width

Logo S/B come on stripes or checks

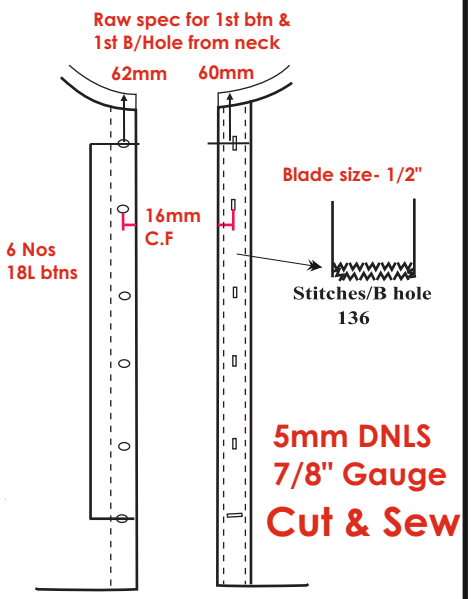

Last B/Hole horizontal

STRAIGHT YOKE

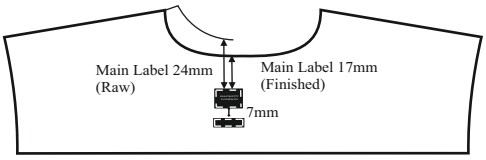

4 side stitch

4 side stitch

BACK

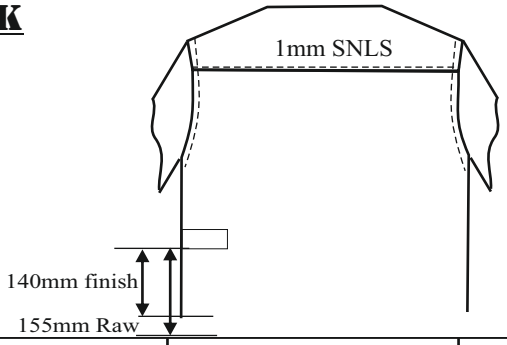

Interlining
Front plkt : Ve35
Collar :3600
Collar patch: N/A
Neck band :3630R
Nk band patch : 3630R
Cuff :N/A

Button(****)
Front : 6, 18L
N Band : 1, 18L
Slv Plkt : N/A
Cuff : N/A
Spare :1-18L, 1-14L@ Pouch
Btn Down : 1+1,14L

*Button shanking S/B 3mm

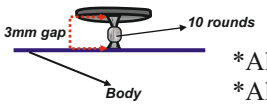

*All Buttons S/B wrapping.
*All Buttons to be readable(Hackett on top side).

W/C placement and Orientation

1) Wash care label to be stitch top of Disclaimer Label
2) Disclaimer label to be stitch below of W/C label
3) Bar code label to be stitch below of Disclaimer label
4)AGEC label to be stitch below of Barcode label

Take care of W/C label Instruction
about B/D collar and Non B/D collar

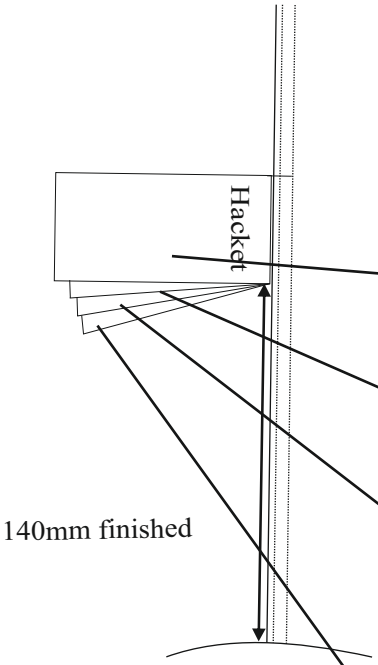

1) Wash care label to be stitch top of Disclaimer Label

2)Disclaimer label to be stitch below of W/C label

3)Bar code label to be stitch below of Disclaimer label

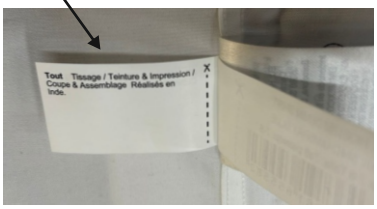

4)AGEC label to be stitch below of Barcode label